

FEATURES

- International CV515 4x4 Chassis
- Darley JMP 500 GPM two stage PUMP with high and low pressure
- Auxiliary wildland fire pump Darley 1 ½ AGE10YD
- Tank capacity: 600-Gal Water/15 Foam
- Hannay hose reel -1"x 100'
- 100+ Cubic feet compartment volume
- (2) 2 1/2" discharge
- (2) 1 1/2" preconnects
- (1) 1 ½ bumper discharge
- 4" valved suction
- (1) 2 ½ direct tank fill
- 2" bumper cab controlled bumber monitor (option)
- Dual and super single tire options.

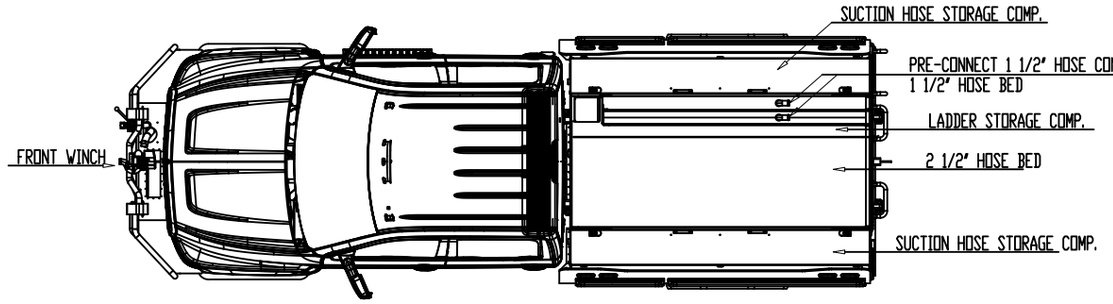

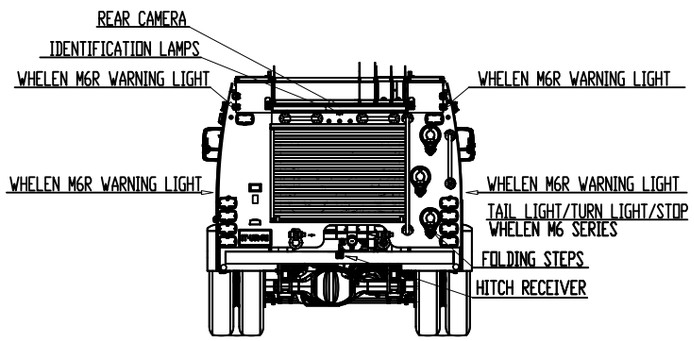

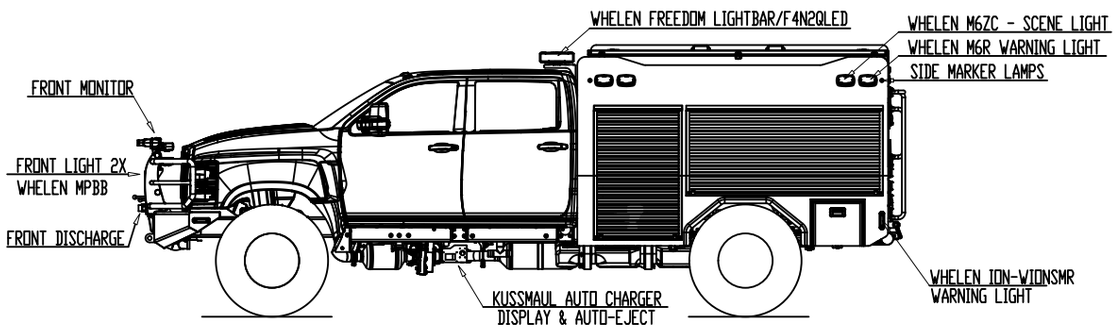

NOTE:
ALL MEASUREMENTS AND PERFORMANCES ARE CALCULATED ACCORDING TO INFORMATION SUPPLIED BY THE VEHICLE'S MANUFACTURER. ITURRI RESERVES THE RIGHT TO MAKE DESIGN MODIFICATIONS WITHOUT PRIOR NOTICE

The information contained in this document is property of ITURRI, S.A.
Unauthorized total or partial copy to third parties is strictly prohibited

Unit: in

		NAME	DATE	PRODUCT NAME:	CODE:
ITURRI Your safety matters	DESIGNED	FLO	19/08/2024	W3 500 GPM PUMP Option 2	-
	APPROVED	FLO	19/08/2024	DRAWING: W3 00 000 00_500GPM_2	SHEET: 1 OF 1