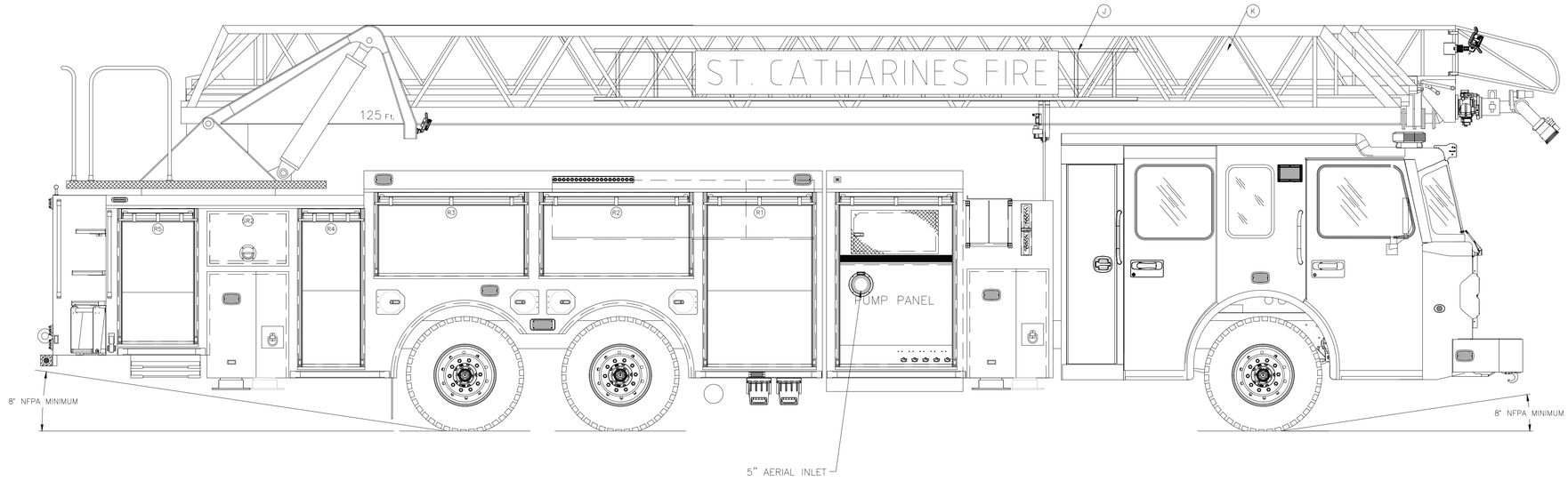

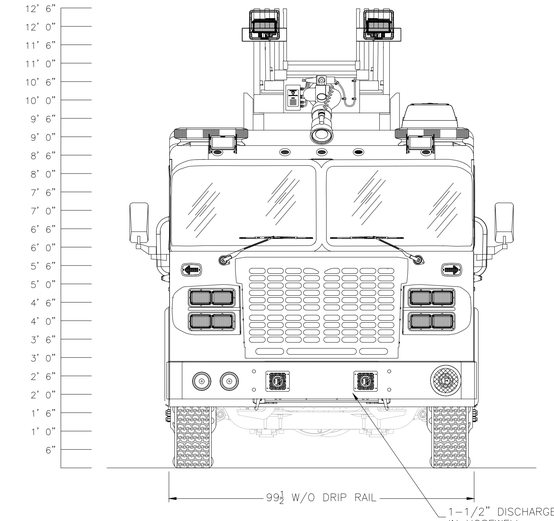

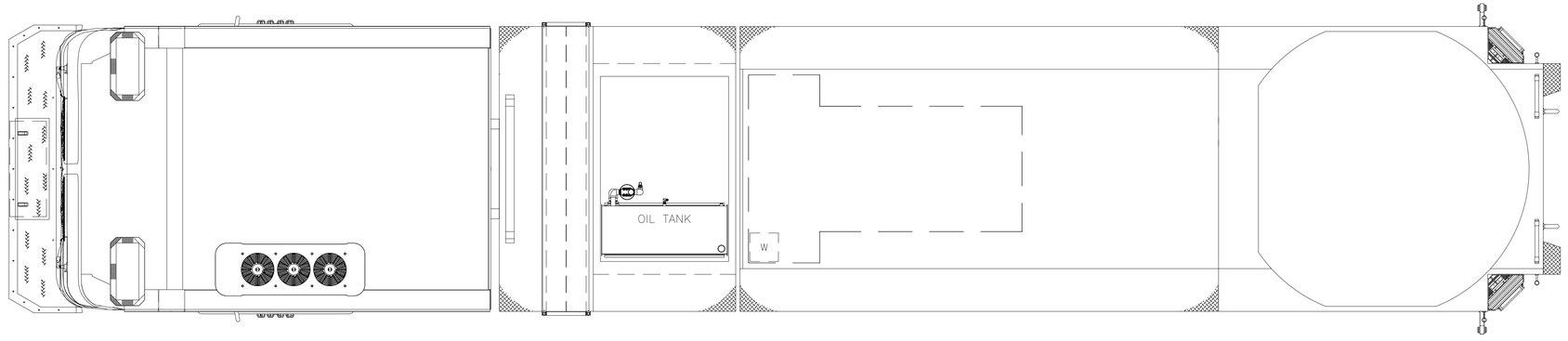

COMPARTMENT DIMENSIONS					
COMPT.	DOOR OPENING	INTERIOR	DIVIDE HEIGHT	DEPTH UPPER	DEPTH LOWER
L1	38"W x 58"H	43.5"W x 71"H	27"	14"	23"
L2	53"W x 24"H	60"W x 37.5"H	–	14"	14"
L3	53"W x 24"H	64.5"W x 37.5"H	–	14"	14"
L4	21"W x 52"H	28.5"W x 62"H	27"	14"	23"
L5	26"W x 43"H	33.5"W x 53.5"H	18"	14"	23"
R1	38"W x 58"H	43.5"W x 71"H	27"	14"	23"
R2	53"W x 24"H	60"W x 37.5"H	–	14"	14"
R3	53"W x 24"H	64.5"W x 37.5"H	–	14"	14"
R4	21"W x 52"H	28.5"W x 62"H	27"	14"	23"
R5	26"W x 43"H	33.5"W x 53.5"H	18"	14"	23"
SL2	28"W x 17"H	28"W x 24"H	–	13"	13"
SR2	28"W x 17"H	28"W x 24"H	–	13"	13"

GROUND LADDERS & PIKE POLES			
ITEM	DESCRIPTION	MODEL #	QTY
A	35' 2 SEC EXTENSION	1200-A	1
B	24' 2 SEC EXTENSION	900-A	1
C	16' ROOF	875-A	1
D	14' FRESNO ATTIC	701	1
E	10' FOLDING ATTIC	585-A	1
F	4' D-HANDLE PIKE POLE	FP4D	2
G	6' PIKE POLE	FP6	2
H	8' PIKE POLE	FP8	2
I	12' PIKE POLE	FP12	2
BASE	16' ROOF	875-A	1
FLY	6' PIKE POLE	FP6	1

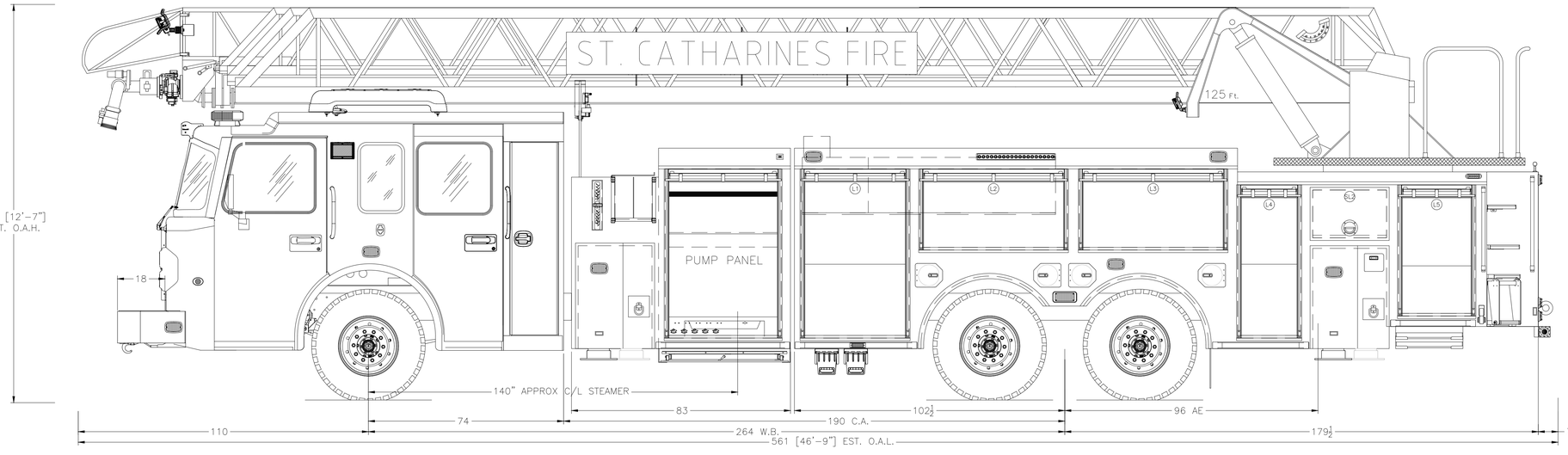

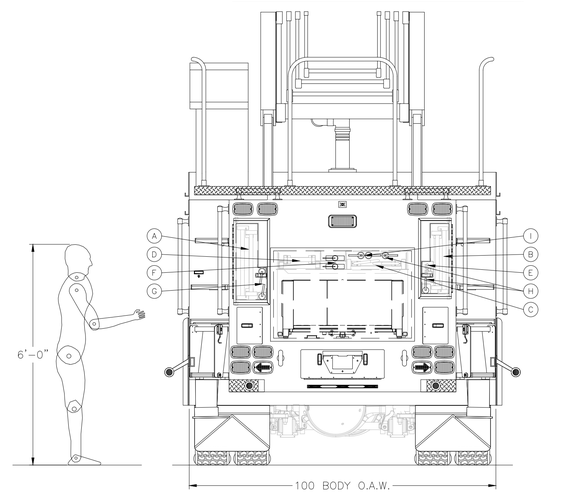

NOTE:

THIS DRAWING IS THE PROPERTY OF SPARTAN MOTORS USA AND IS TO BE USED ONLY IN REFERENCE TO THE WORK PROPOSED OR CONTRACTED BY SPARTAN MOTORS USA ANY REPRODUCTION IN PART OR IN WHOLE WITHOUT THE WRITTEN PERMISSION OF SPARTAN MOTORS USA IS STRICTLY PROHIBITED.

DIMENSIONS SHOWN ARE APPROXIMATE AND ARE SUBJECT TO CHANGE AS MAY BE FOUND NECESSARY DURING CONSTRUCTION. THIS DRAWING MUST BE PLOTTED TO THE PAPER SIZE LISTED IN THE TITLE BLOCK FOR THE LISTED SCALE TO BE VALID.

THIS DRAWING IS FOR REFERENCE PURPOSES ONLY. SOME ITEMS MAY OR MAY NOT APPEAR ON THE DRAWING THAT MAY OR MAY NOT BE INCLUDED IN THE SPECIFICATIONS. THE SPECIFICATIONS SHALL BE THE FINAL AUTHORITY TO DETERMINE WHAT IS SUPPLIED ON THE APPARATUS.

REVISION HISTORY			
REV	INT.	DATE	DESCRIPTION
01	CL	8/29/23	ORIGINAL LAYOUT
02	Brodd	02/08/24	DELETE ECO-IDLE TECH SYSTEM

PROPOSAL

CHASSIS:	SPARTAN GLADIATOR ELFD 5" RAISED ROOF
ENGINE:	CUMMINS X15 565HP WITH ALLISON 4000 EVS
PUMP:	WATEROUS CSUC 2250 RATED AT 7000 LPM
WATER TANK:	300 IMP GAL (360 U.S. GAL)
FOAM CELL:	N/A
BODY MATERIAL:	1/8" ALUMINUM
HOSE BED:	800' OF 4" & 400' OF 2-1/2" / 39 CUBIC FEET
GENERATOR:	N/A
COMPARTMENTS:	173 CUBIC FEET
GALVANIZED TORQUE BOX	

SMEAL
REV GROUP

ST. CATHARINES FIRE SERVICES
ST. CATHARINES, ON

MODEL:	125' REAR MOUNT AERIAL (S34RL-125)		
DEALERSHIP:	SAFETEK EMERGENCY VEHICLES		
SCALE:	1/2" = 1'	DRAWN BY: CL	DATE: 02/08/2024
SIZE:	24" X 36"	DRAWING NO: 23365	REV: 02
SHEET:	1 OF 1		